Installation Instructions for TMPH Rafter Connector

Adjusts to pitches from 6/12 to 14/12

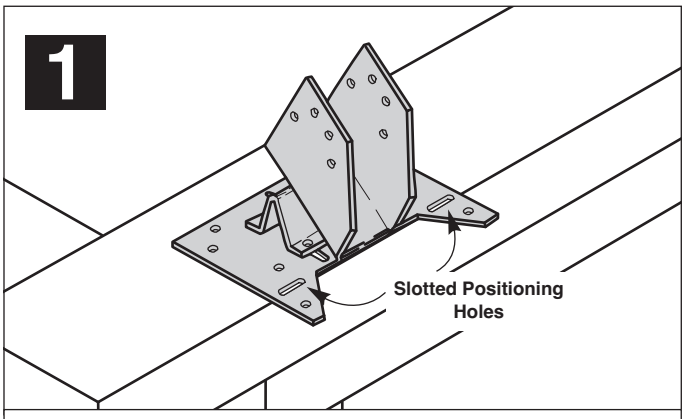

Position connector on top plate.
Center outside edge of top plate in slotted positioning holes.

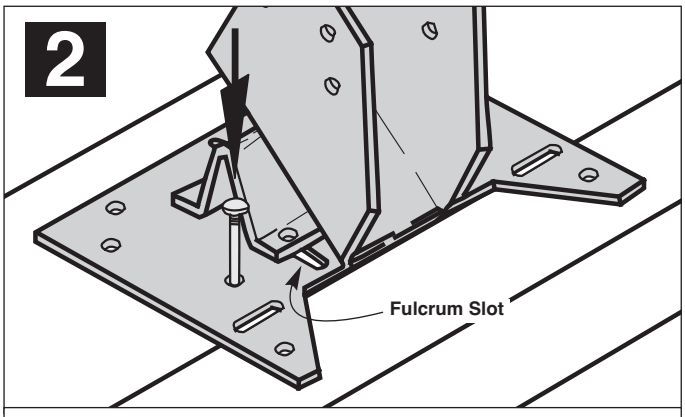

Fasten connector to the top of top plate with (6) 10d nails.
NOTE: Do not drive nails through fulcrum slots yet.

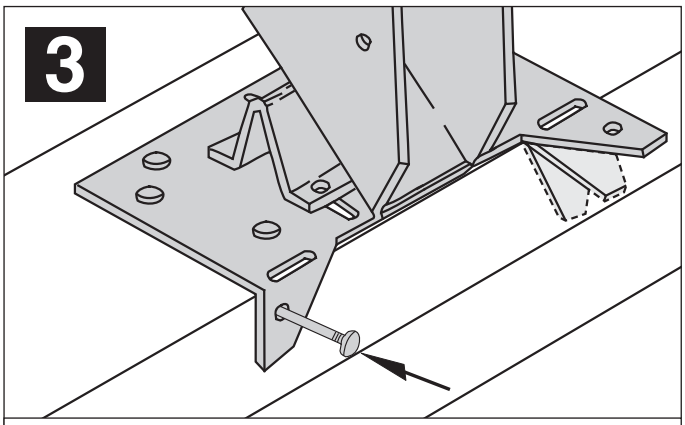

Bend tabs downward against edge of top plate.
Fasten with (2) 10d nails.

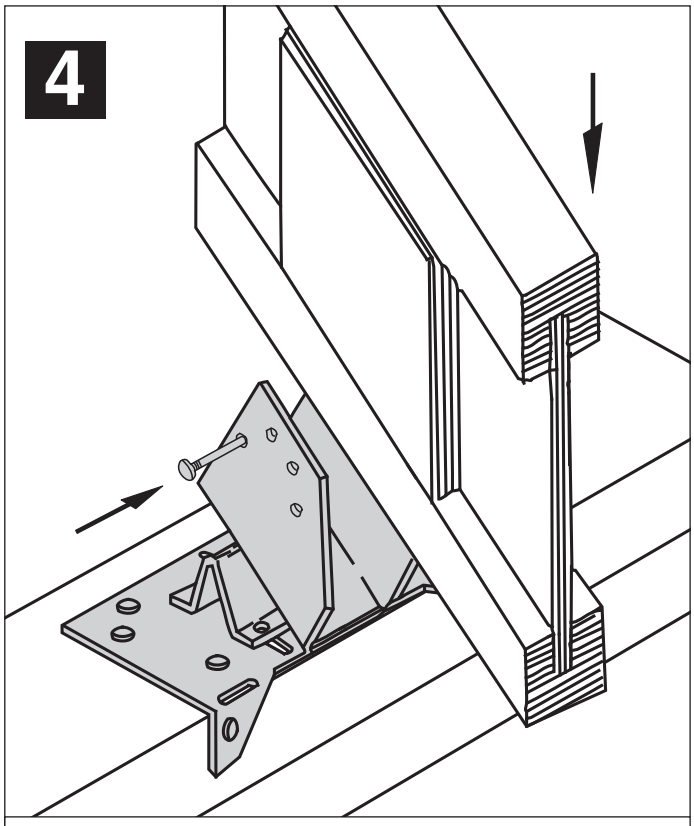

Insert rafter into Rafter Pocket. Use downward pressure to fully seat the rafter. Adjust rafter and pocket to correct pitch. Fasten rafter to rafter pocket with 8) 10d x 1-1/2″ nails.

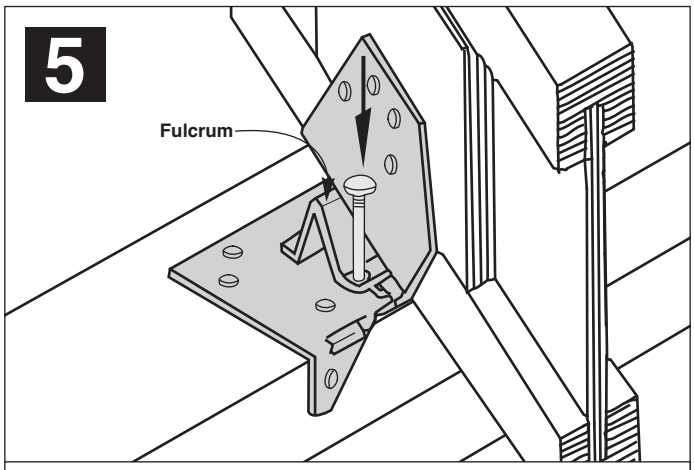

Slide fulcrum tight under rafter pocket and secure with (2) 10d nails.
At this point, all nail holes should be filled.

Customer Service:
Burnsville, MN
Phone: 1-800-328-5934/1-952-898-8772
Fax: 1-952-898-8605

Manufacturing:
Montgomery, MN • Livermore, CA
Largo, FL • Thornhill, Ontario

Warehouses:
Houston, TX
Lumberton, NJ

www.USPconnectors.com

USP56-111
Information valid until March 1, 2012.